NO./编号	DESCRIPTION/修改说明	DATE/日期
1	First Release/第一版本	2020-10-24
2	Adjust drawing layout/调整图纸布局	2022-07-07

客户确认签名/
APPR. BY Customer

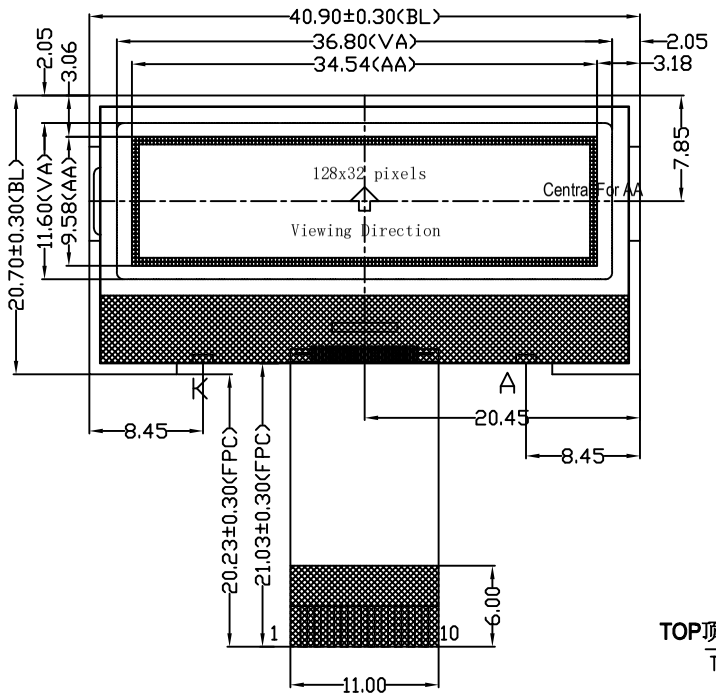

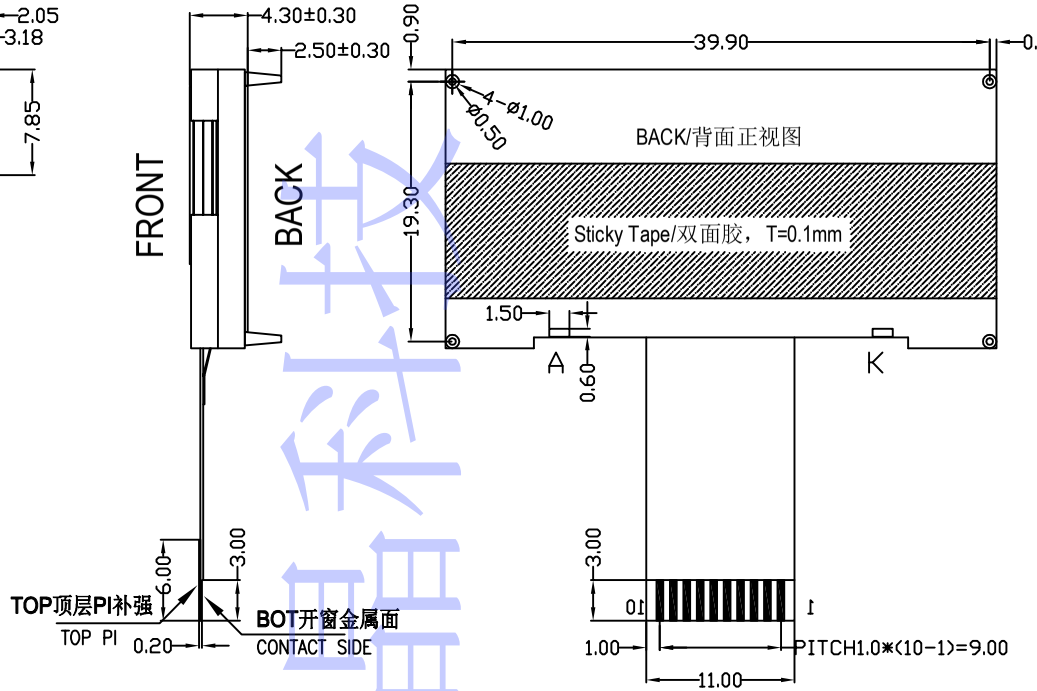

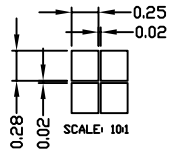

BL Circuit Diagram/背光原理

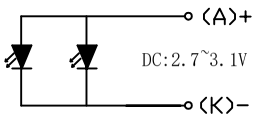

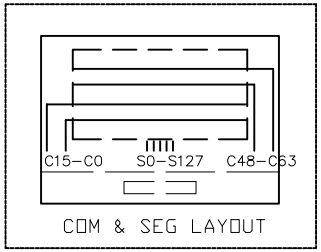

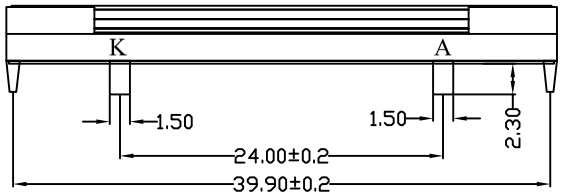

PIN ASSIGNMENT:		Example(SPI-4L)
1	VG	
2	XVO	C=1UF/25V
3	VO	
4	VSS	
5	VDD	+3.3V
6	SDA	IO
7	SCK	IO
8	A0	IO
9	/RES	IO
10	/CS	IO

仅为举例应用

项目/ITEM	参数/PARAMETERS	项目/ITEM	参数/PARAMETERS
OPERATING VOLTAGE	3.3V	OPERATING TEMP	-20°C ～ 70°C
OPERATING CURRENT	0.18MA(TYP. WITHOUT BACKLIGHT)	STORAGE TEMP	-30°C ～ 80°C
LCD DRIVE VOLTAGE	6.0V(VO-XVO)	BACKLIGHT	2 LED,30MA(TYP.),VLED=2.7~3.1V[2.9V(TYP.)],WHITE
DISPLAY MODE	FSTN,POSITIVE,TRANSFLECTIVE	ROHS STANDARD	YES ■ NO □
LCD DRIVE METHOD	DUTY：1/33; BIAS：1/6	CONNECTION	FPC
Driver/Controller	ST7567 OR EQV.	UNSPECIFIED	± 0.2mm
VIEW DIRECTION	6:00 O'CLOCK	Third perspective	

HUIJING
深圳市绘晶科技有限公司
Shenzhen huijing Technology Co. Ltd.

DRAWN/设计	LM	NAME/名称	COG工程图
CHECKED/检查	ZPF	MODEL NO./型号	12832COG-55L
APPROVED/批准	YXS	REV./版本	V1.0
TEL/电话	0755-23146001	DATE/日期	2022-07-07
FAX/传真	0755-23146002	URL/网址	http://www.huijinglcm.com
Address/地址	深圳市宝安区石岩街道官田横坑工业大道华丰官田科技园A3栋4楼/4th Floor, Building A3, Huafeng Guantian Science and Technology Park, Guantian Hengkeng Industrial Avenue, Shiyan Street, Bao'an District, Shenzhen		

绘晶科技